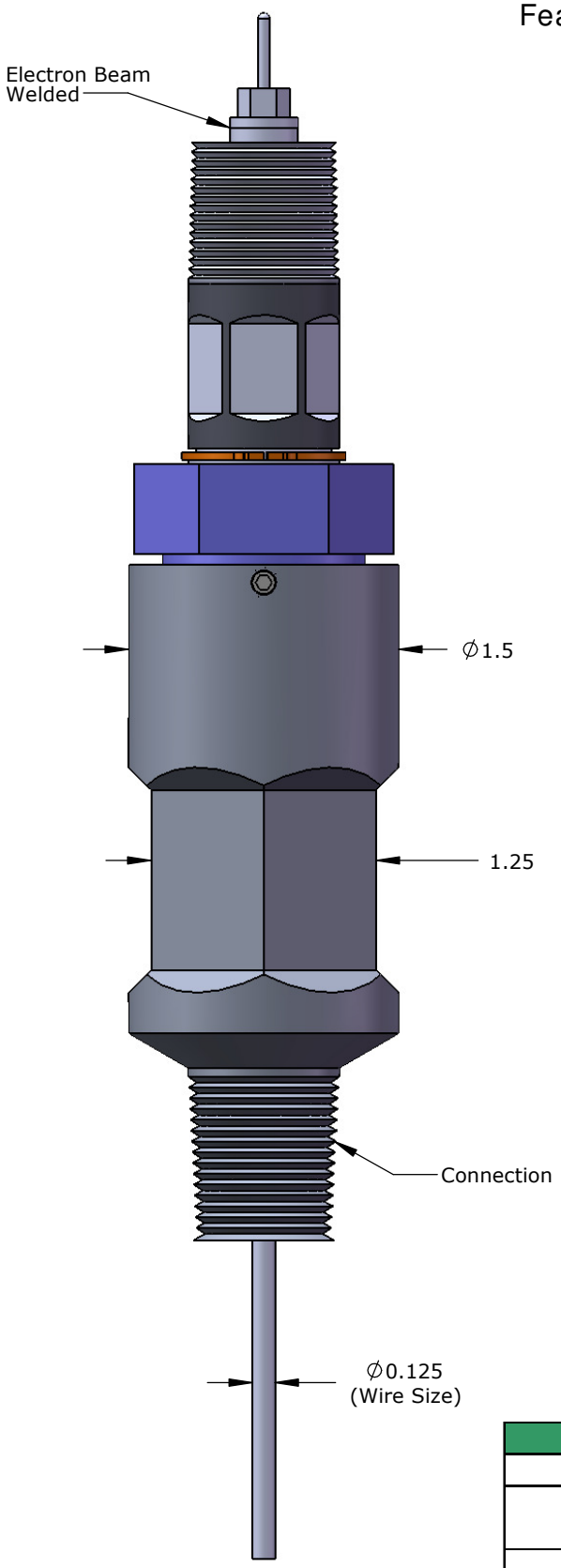

Features

- Metal to Metal Seals
- Welded Glass Feedthru
- Simple Installation
- 10 000 psi
- 200ºC

Wellhead Feedthru		
Wire Size	**Connection**	**Part No.**
1/8" OD	1/2" NPT	10161
	2" NPT	10163
1/4" OD	1/2" NPT	10162
	2" NPT	10164